Packard as an Aero Engine Builder

Spark-Ignition Engines: 1923-1939

by Robert J. Neal

The reader is referred to the initial article of this series, "Packard as an Aero Engine Builder 1919 - 1923", which appeared in Vol. 1 No. 4 (Winter, 2002) of *Torque Meter* for history of the earlier Packard aero engines. These articles are excerpted from *Master Motor Builders*, by Robert J. Neal. Unless otherwise noted, all illustrations are from the author's collection.

By late 1922 Packard was ready to take another engineering step in the development of their aero engines. They were looking for a reduction in weight, more power and more reliability. As in the past, they went to the Army and Navy for development contracts, as the great majority of their aero engines to this time had been built for the services.

The 1A-1300 Aero Engine

The Navy Bureau of Aeronautics contracted with Packard on December 9, 1922, (contract 56946) to develop a larger version of the 1A-1237. The outcome was 1A-1300 serial No. 1 which passed its 50-hour test on November 21, 1923. This was almost a year after the contract was placed and was longer than Packard characteristically took to design and build a new engine. They explained in their test report on the above 50-hour test dated November 26, 1923, that this had occurred "chiefly due to rejection of billets for crankshaft forgings for failing to pass a micro-graphic test."

The contract had been for three engines and the general contract requirements and results were as follows:

	CONTRACT	ACTUAL
WEIGHT	690 lb or under	684 lb
POWER	360 hp @ 1,800 rpm	400 hp @ 1,800 rpm
FUEL CONS.	0.53 lb/bhp/hr	50 lb/bhp/hr
OIL CONS.	0.025 lb/bhp/hr	0.025 lb/bhp/hr
WATER WGT.	50 lb or under	25 lb

The engine had a bore of 5 1/8" and stroke of 5 1/4" for a displacement of 1,299.63 cubic inches. Compression ratio was 5.5 to 1 and rated power output was 360 hp @ 1,800 rpm. As stated above, the engine would actually produce 400 hp at that speed and a maximum of 475 hp @ 2,300 rpm.

The design of the engine differs considerably from Packard's prior aero engines. The cylinder head is made from a drop forging and is welded to the barrel assembly which carries a water jacket. The six cylinders of each bank are tied together by an aluminum valve housing which carries the valve springs, cam, cam followers, cam drive gears and all other associated hardware as well as the intake and exhaust ports. This strengthened the top end of the engine and allowed assembling each bank of cylinders, including all associated hardware above the crankcase, and mounting them as a unit on the crankcase.

The multiple valve spring design of the marine 1M-618 and 1M-1237 (which was used on some of the late 1A-1237 engines as well) was carried into the design of this engine. Seven piano wire springs were used on each valve with the same design guides and retainers as were used on the marine engines. Again the advantage claimed was a higher resonant frequency than engine speed, thus reducing breakage and "dancing." This not only gave greater reliability than conventional springs, but spring breakage would not cause valve action failure because of the backup of multiple springs.

A new innovation was oil cooled exhaust valves. These had been first used on Packard's experimental 1A-2200 engine recently built for the Army only a short time before the 1A-1300 was completed. The incorporation of this feature had been a last-minute decision and they knew that the oil feed system used would have to be improved upon for production engines. The idea had been to prove the theory and see if this method of valve cooling would reduce exhaust valve burning, always a weak spot in "high- speed" aero engines of the time. The design did prove itself and Packard described their intended improvements in their 50-hour test report, which incorporated a pressure oil feed to replace the gravity system used.

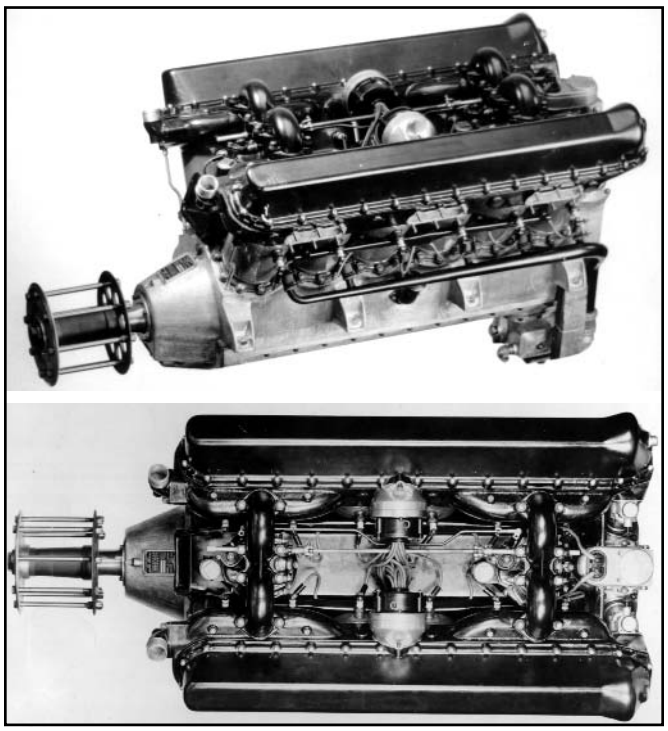

1A-1300 showing two Stromberg NA-Y5 carburetors below their manifolds, the center-mounted distributors and the "Packard-Splitdorf" magneto. 1A-2500 top views were similar.

Carburetion design was quite different from Packard's prior aero engines and much more conventional. Two Stromberg type NA-Y5 updraft carburetors were mounted on an intake manifold between the cylinder banks.

Four valves per cylinder were used. A single overhead cam per cylinder bank drove pairs by "T" followers driven by a single cam lobe rather than by rocker arms or using two cams. Intake and exhaust ports were "Siamese," resulting in only three exhaust stacks for each bank of cylinders rather than the usual six, or twelve in the case of the 1A-2025. This is a feature useful in identifying the use of Packard 1500 and 2500 engines in aircraft photographs.

Ignition was by a newly designed magneto built by the Splitdorf Electrical Company and called by Packard the "Packard-Splitdorf" magneto. The design utilized singular mechanical drive with dual electrical hardware driving two plugs per cylinder. In this manner they could provide a dual ignition system which had backup of all components commonly involved in failure, without having to duplicate the heaviest portion of the ignition system, namely the mechanical drive, which was rarely a failing component. Thus they saved several pounds of weight with negligible loss of reliability.

The magneto was mounted vertically at the rear of the engine inside the V in the same position used by the generator on the Liberty engine and driven by the same shaft used to drive the camshaft drive shafts. The distributors were placed facing one another inside the V and mounted one on each inside surface of the two valve assemblies and driven off the center of the camshafts by spiral gears. This feature was designed by Navy Lt. Comdr. Leighton and replaced the original design in which the distributors were mounted on the rear of the camshafts as on the Liberty. This new design was lighter and shortened the engine as well.

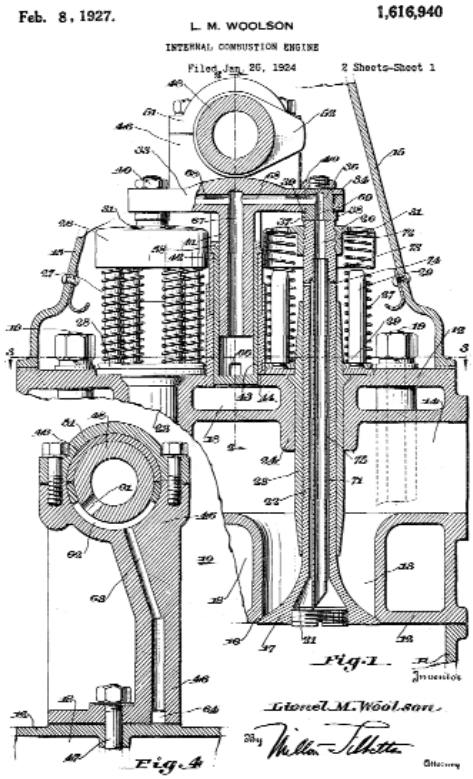

Capt. Woolson's patent covering the design of oil-cooled valves for the new aero engine line.

The engine manual noted that the magneto could be replaced with Delco battery ignition if desired. In such case the same distributor heads would be used. It is not likely the single engine built was ever so equipped.

The last major change involved the design of the accessory drive and the driven items, namely the oil, fuel and water pumps. These were incorporated into a single unit which also included the oil strainer and pressure relief valve. This simplified the required drive train considerably and the single unit pump and drive train reduced weight by several more pounds. Packard noted their intention to use the same pump assembly on other engines to be introduced later, thus reducing costs and simplifying service (the 1A-2500 used the same pump as the 1A-1500).

The test was written by Capt. Lionel Woolson and approved by Col. Vincent. The following "recommendations" are quoted from that report.

> "During this time (the approximately one year between contract and delivery of the 1A-1300) there were not only important advances in the art but the performance demands of pursuit engines, for which duties the 1300 engine is particularly suited, have changed in respect to higher power requirements.
>
> Although the model 1300 engine today is undoubtedly the lightest for its displacement of any, as well as developing considerably more horsepower at its rated speed than any other engine of its type, an investigation has shown that it is possible to still further improve on these superiorities by relatively slight changes in the engine.
>
> This refers to increasing the bore from 5-1/8" to 5-3/8" and increasing the stroke from 5-1/4" to 5-1/2", thus increasing the displacement from 1,300 cu. in. to 1,490 or approximately 1,500 cu. in. This increase will result in an engine developing about 505 horsepower at 2,000 rpm as against 438 horsepower for the 1,300 cu. in. engine. This increase in piston displacement is obtained without spreading the cylinder centers and without spreading the timber supports. The weight increase due to this change will be quite nominal, not to exceed 25 lb. At the time of this writing instructions are being awaited from the Navy Department for proceeding with the remaining two engines on this contract built to the enlarged specifications."

They also requested that the 1A-1300 engine be tested with a special series of 5-hour tests designed to provide maximum stress in a minimum amount of time in order to find any weak points of design as rapidly as possible, thus allowing corrections to be built into the new 1A-1500 engines.

Permission was granted for all requests. The tests were carried out and this was the only 1A-1300 engine built. The next in the series was 1A-1500 serial No. 1.

Capt. Woolson had done much of the design work on the 1A-1551 engine (*Torque Meter* Vol. 1, No. 4) and was the principal designer of this engine and all following aero and marine engines produced by Packard until his untimely death in 1930.

The patents covering most of the innovative design features of the 1A-1300 engine and the 1,500 and 2,500 cubic inch engines which immediately followed were all taken out by Woolson and are listed below:

Feature	Patent Number	Application Date	Issue Date
Dual magneto	1,616,939	5/4/23	2/8/27
Multi-spring valve return	1,660,982	5/25/23	2/28/28
Oil-cooled valves	1,647,849	6/7/23	11/1/27
Cyl. head/valve assembly	1,665,396	12/7/23	4/10/28
Multi-purpose pump	1,698,044	1/2/24	1/8/29
Pressure feed for Oil-cooled valves	1,616,940	1/26/24	9/10/29

The 1A-2200 Aero Engine

As mentioned before, the Army was also interested in developing a new engine to replace the 1A-2025. In mid 1923 they had placed a development contract with Packard and provided them with 1A-2025 serial No. 5 to use as a basis. Packard worked on the revision of this engine simultaneously with the design of the 1A-1300.

The re-designed 1A-2025 became the 1A-2200. Only one engine was built and it was actually only half an engine in that only the right cylinder bank was built, the left being blocked off. The 1A-2025 crankcase, crankshaft, water and oil pumps were used. The cylinder and valve assemblies were of new design and similar to that used on the 1A-1300. Four valves of 1.875" clear diameter were used per cylinder and the exhaust valves were oil cooled. Cylinders were provided with four plugs like the 1A-1551 and Engineering Division W-1 and modified 1A-1551 distributors were used. A full engine would have required four duplex Delco distributors and eight coils to drive its 48 plugs—not a weight saving feature to be sure.

The 1A-2025's 5 3/4" bore was increased to 6" and the 6 1/2" stroke retained. Displacement would have been 2,205.44 cubic inches with a full engine. The engine was 50-hour tested prior to 10/13/23 (the date of the only known photographs of the engine which are captioned "1A-2200 50-Hr. test Engine") and rated power was 680 hp @ 2,000 rpm with a full engine.

The development of this engine was discontinued with the completion of the 1A-1300. In its place would be developed the 1A-2500, an enlarged version of the 1A-1500. The Army and Packard were much more pleased with the 1A-1300/1500 engine than the 1A-2200, as well they should have been.

The 1A-1500 Aero Engine

Work was begun immediately on the 1A-1500 which, other than the increased bore and stroke, was about the same design as the 1A-1300. The valve housing was redesigned to incorporate a new pressure oil feed for the exhaust valve cooling, and the pump assembly was changed to some degree.

Packard subjected serial No. 1 to its first 50-hour test between February 7 and March 5, 1924. It had already been tested for a number of hours prior to that time and two modifications had been made to improve lubrication. First it had been found that oil was being thrown onto the cylinder walls causing excess oil burning. An attempt was made to fix this problem by spacing the oil pan further from the crankcase for this test. The second problem was insufficient capacity of the oil pump, so a temporary external pump was used during the test.

The test was discontinued after 35 hours as a result of failure main bearings 3, 4 and 5 which caused a loss of oil pressure. This was later determined to have been caused by failure of the crankcase bearing support webs after continuous operation at 500 horsepower at 2,100 rpm.

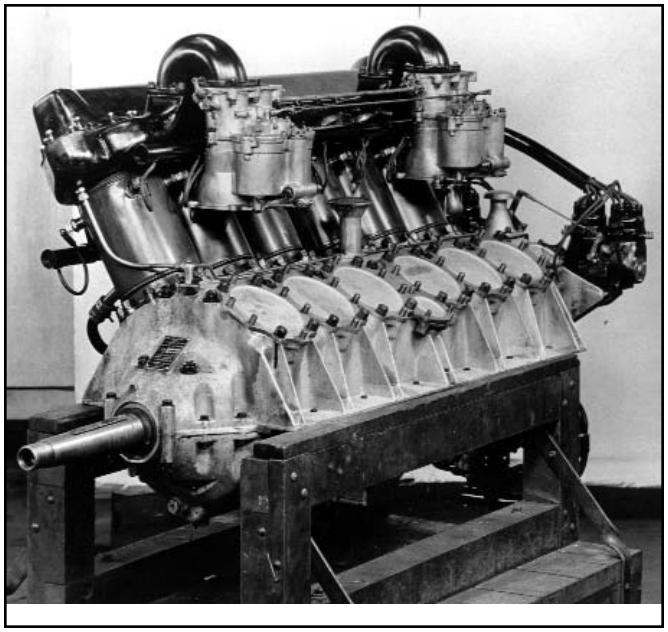

1A-2200 built on the crankcase of 1A-2025 No. 5, but with only one bank of cylinders. Col. Vincent used a similar setup with the first 1M-618, which used half of a 1M-1237.

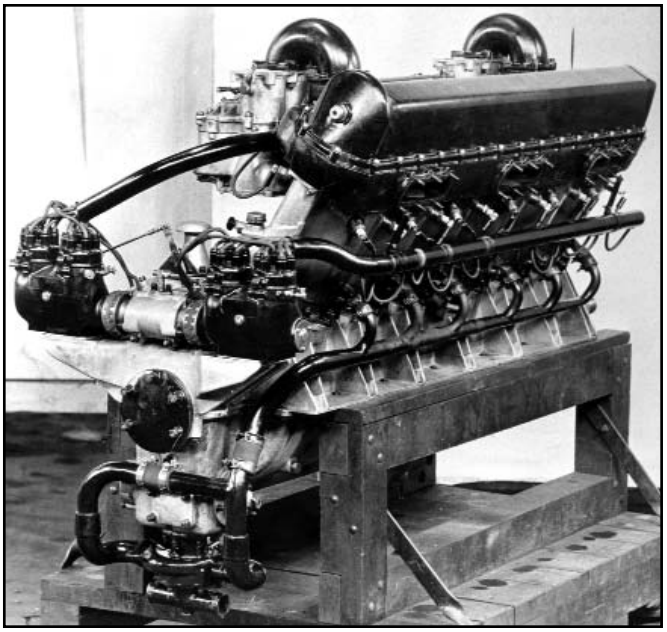

1A-2200. Note the dual Delco 1A-1551 type distributors required to feed 24 plugs of just 6 cylinders. A full engine would have required four distributors.

The design of this engine was basically the same as the 1A-1300 except that the bore was 5 3/8" and the stroke 5 1/2" giving a displacement of 1,497.6 cubic inches. Rated horsepower was 400 at 1,800 rpm. Packard had been approached by the Army Air Service "intimating" that an engine of this size would be "highly suitable" for competition for a contest to be held in the latter part of 1924 for Corps Observation planes. However, the rules stated that engines could not be run at speeds in excess of those at which it passed its 50-hour test. The Engineering Division at McCook Field therefore suggested that the engine be subjected to a 50-hour test at 500 hp @ 2,100 rpm.

It was admitted that this was a very severe test for a new engine but that it would be desirable to find any weaknesses early as well as to get the engine rated at the higher power for use in the contest. The Air Service arranged with the Navy Bureau of Aeronautics to run this special 50-hour test.

Thus a second 50-hour test was run between March 19 and March 28, 1924, with the rating now 500 hp @ 2,000 rpm. For this test a new crankcase was installed and extra bracing added at the bearing webs. The original bronze-backed bearing shells were replaced with steel-backed shells, and the same backup oil pump was used as a new design pump was not yet available.

The test was completed with what were considered minor failures. The power-to-weight ratio of the engine at 500 hp was 1.4 lb per horsepower. At the completion of this test it had been subjected to that output for approximately 100 hours. According to Packard, no other engine had been subjected to a power-to-weight ratio of less than 1.7 lb/hp for that length of time.

The Army used the 1A-1500 in the XO-1 Curtis Falcon and the XO-2 Douglas observation planes which won first and second place in the Corps Observation plane competition mentioned above, as well as in the O-7 and O-9 Douglas. The Navy flight tested it in the NC-2 (this little known fact was noted in Packard's test No. 234-65 of 12/28/25 of Navy-owned 2A-1500 No. 30-S, Navy No. 10963) and used it in the PN-8, PN-9, the Boeing FB-3 and several Loening OL-1 amphibious biplanes. It was built in direct, geared and inverted versions.

The 1A-2500 Aero Engine

Within a month design progress on the 1A-2500 for the Army was well under way. This engine was a scaled-up version of the 1A-1500 with few exceptions. It used the same Packard-Splitdorf model P.A. double magneto and the same pump assembly. Two Stromberg NA-S12 carburetors were used. Bore was 6 3/8" and stroke 6 1/2". Displacement was 2,539.55 cubic inches and rated power of 800 hp @ 2,000 rpm. This engine used a design of rod called "articulated." This system consists of a master and a slave rod for each pair of opposite cylinders. It was chosen because back then available bearing material provided more strength in this design to withstand the added power of the larger engine. In addition, the master/slave design rod pairs were lighter than a comparable pair of fork-and-blade as used on the 1A-1500.

This rod design results in a slightly longer stroke (6.7604") on the slave rod side of the engine (left bank), and thus a total displacement somewhat larger than the calculation that simple bore and stroke produces. In this case the 2500 engine would produce a displacement of 2,489.6 cubic inches with fork-and-blade rods, had any such engines been built, but produced 2,539.55 cubic inches with articulated rods.

The first 1A-2500 engine was completed and passed acceptance tests of the Army by October of 1924. It was used in a number of military airplanes, among them the XLB-1 Huff-Daland light bomber and the Boeing PB-1.

The completion of these two new engines prompted Packard to initiate a series of advertisements in Aviation magazine. This magazine had been their prime carrier of aero advertisements beginning in 1919 and also carried more articles with technical coverage of their aero engines than any other magazine of the period. Their last advertisement had been in the December 18, 1922 issue. The three-ad historical series ran in the February 16, March 2 and March 16, 1925 issues.

The first ad recalled and pictured Packard's pioneering "299" engine. The second reminded the public of Packard's developments which led up to the World War I Liberty and added the "905-2," "905-3" and the Liberty. The third touted their postwar developments

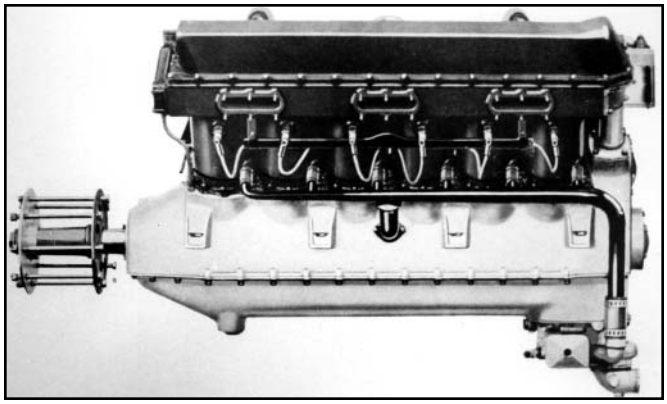

The 1A-1500 direct-drive engine was very similar in appearance to the 1A-1300.

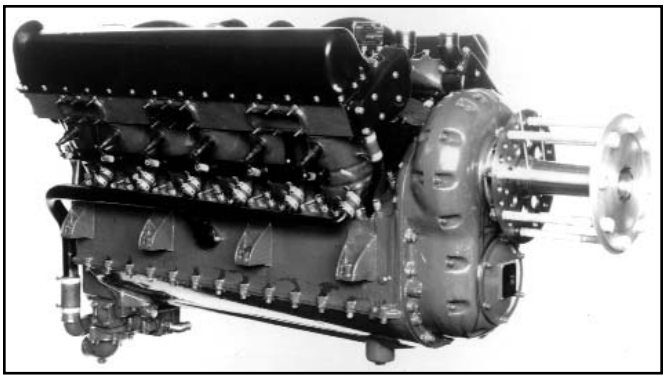

The geared 1A-1500 was Packard's first geared engine since the Liberty 12C. The reduction gear for this and all subsequent Packard aero engines was built by Allison Engineering Company.

and added the 1A-1237 and the 1A-1551 Shenandoah. All had been titled "Ten Years of Packard Pioneering 1915-1925 in Aircraft Motor Development."

These led to the ad which announced their two new engines, the 1A-1500 and the 1A-2500, on April 20, 1925. "Ten Years of Packard Pioneering in Aircraft Motor Development 1915-1925 And Now Two New Sizes of Aircraft Motors."

They followed this ad layout for the next four years, heading almost all their ads with "Ten Years of —", "Eleven Years of —", "Twelve Years of —" and finally "Thirteen Years of —" until they had a lapse in their advertising program from the end of 1928 until April 1930 when they announced their radial Diesel engine.

Their first manual for these engines was dated May 1925 and by this time the 1A-1500 was available in direct drive, geared (about 2:1 stepdown) and inverted with a rating of 500 hp @ 2,000 rpm. The 1A-2500 was available in direct and geared (also about 2:1 stepdown), and rated at 800 hp @ 2,000 rpm. Reduction gears for these and all following models were made for Packard by the Allison Engineering Company of Indianapolis, Indiana, who would shortly be producing aircraft engines of their own.

The 2A-1500 Aero Engine

1925 brought more experience with the 1A-1500 and 1A-2500 aero engines and further improvements were incorporated. Packard ran the Navy 50-hour endurance test on 2A-1500 serial No. 30-S between December 1 and 15, 1925. The 2A-1500 engine incorporated changes to the 1A-1500 model designed to allow safe continuous operation at a rating of 600 hp @ 2,500 rpm and also to incorporate an ignition design change requested by the Navy.

The most important improvement incorporated in this new model as stated by Packard in their report of that test "consisted of an entirely new type of crankcase construction. The change had for its object the elimination of alternating tension and compression stresses in the crankcase webs which had resulted in the fatigue failure noted in the McCook Field 35-hour test at 2,300 rpm." This change consisted of an entirely new method of fixing the main bearing caps to the crankcase which relieved all tensile stresses from the crankcase webs. Bearing caps were now fastened to the crankcase by long through-bolts running parallel to the cylinder bores and extending completely through the main crankcase webs. The top end of the bolt clamped to the top of the crankcase with a nut and crab which also served as one of the hold-down clamps for the cylinder. This design was patented by Woolson as 1,916,292. Application was filed on December 11, 1925, and the patent issued on July 4, 1933.

This new bearing support design increased the overall weight of the crankcase from 103.44 lb for the 1A-1500, to 109.0 lb for the 2A-1500. The 5.56 lb increased weight was offset by a decrease in weight afforded by use of new articulated rods of the same design as used in the 1A-2500 model. This rod design, as explained when their use in the 1A-2500 was discussed, afforded greater strength in high-speed use with the bearing material then available. It also saved 5.81 lb in total engine weight.

Bore and stroke remained the same in this model, but because of the use of articulated rods displacement was increased from 1,497.6 to 1,530.4 cubic inches. Power rating changed to 525 hp @ 2,100 rpm and 600 hp @ 2,500 rpm. The design of the articulated rod was also covered by a patent which was applied for by Capt. Woolson on July 2, 1925, and issued as 1,687,917 on October 16, 1928.

The depth of the head was increased by 1/8",providing greater rigidity and increased water jacket space for better head cooling. Improvements were made in the design of the camshaft drive gear train so that in this model the complete drive train could be removed without removal of the cylinder blocks, or taking the engine out of the plane in ordinary installations.

The carburetor air intakes and manifolds were redesigned with two objectives. First was to provide exhaust heating of the intake manifold and the second to facilitate removal of the complete intake system from the engine as a unit, thus greatly simplifying assembly and disassembly of the engine. The intake manifold heating design was covered by Woolson's patent 1,909,032 application filed on September 25, 1926, and issued on May 16, 1933.

The Stromberg model NA-Y5 2 3/16" throttle bore carburetors were replaced with NA-Y6P models with 2 7/16" bores. The new carburetors not only provided

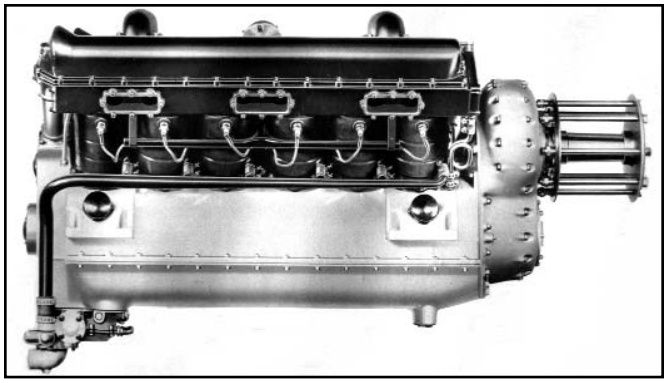

1A-2500 Geared Engine

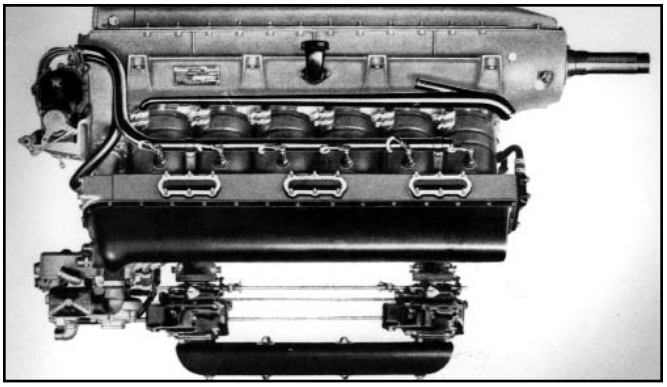

2A-1500 inverted configuration, with carburetors hanging well below the cylinder banks. 3A-1500 and some late 2A-1500 engines used a new intake manifold design that allowed the carburetors to be mounted much higher.

greater capacity to accommodate the higher rating and slightly larger displacement of the new engine, but were less vulnerable to violent airplane maneuvers than the former model.

The Navy Bureau of Aeronautics requested Packard to supply the engine with two Scintilla Model AG-12-D magnetos due to the exceptionally good experience they had with them on other manufacturers' engines. Thus the 2A-1500 was available with these, mounted on a horizontal bracket on the rear of the engine and driven from a vertical accessory drive shaft by a set of right angle bevel gears. Use of the double Scintilla AG-12-D's added 10 lb to engine weight if selected.

The center cam driven distributors of the 1A-1300 and 1A-1500 were discontinued. Alternate ignition systems available were: Delco battery system with distributors at the rear of the engine driven from the upper camshaft drive side gear or Splitdorf or Scintilla double magneto mounted vertically in the V with separate distributor drives.

The 2A-2500 Aero Engine

The 1A-2500 engine was redesigned in much the same manner as the 1A-1500 and released as the 2A-2500 at about the same time. Power rating remained the same at 800 hp @ 2,000 rpm.

In this case the depth of the head was increased 1/4" and improved rigidity 50% over the old head, plus increasing water cooling capacity. The same improvements in the design of the ignition systems were made as were done in the 2A-1500.

The air intake and intake manifold heating design of the 2A-1500 was carried into the 2A-2500 and also resulted in the ability to remove the complete intake system from the engine as a unit.

The new Scintilla Model AG-12-D magnetos were also made available on this model with the same weight penalty over the Delco battery and Packard-Splitdorf or Scintilla double magneto systems.

The through-bolt main bearing system of the 2A-1500 was not used on the 2A-2500, the standard bearing caps of the 1A-2500 being retained. The upper- to lower-half crankcase studs were increased in diameter from 5/16" to 3/8" to provide a more rigid connection between the two halves.

The first manual on these two new models was issued in June of 1926 along with a Service Parts List.

Shortly after the "2A" models became available the government awarded Packard a contract of $3,737,000 for 175 2500-series engines and 75 1500-series engines along with spare parts and tools. Packard production was ten engines per month and they expected to complete the contract by July of 1927. Some of the engines would be delivered late enough to be "3A" versions. It was the largest single government contract awarded for aviation expenditures since the end of World War I.

The Navy was highly interested in the ability of their patrol aircraft to cover long distances aloft. This, of course, involved the ability of both the aircraft and its engine. So far as the engine was concerned there were three important factors—reliability, power and fuel economy. Reliability was becoming a much more important factor now that the combination of aircraft design and available engine power predicted flight duration ability in excess of 24 hours. Available power in combination with fuel economy determined how much aircraft and fuel could be lifted, and thus how long the duration of the flight could be and how much distance could be covered.

The Naval Aircraft Factory at Philadelphia built two PN-9 flying boats with which to attempt a 2,030-mile flight from San Francisco to Maui in the Hawaiian Islands. Each was powered by two geared 1A-1500 Packard engines. They also had procured the Boeing-built PB-1 patrol boat, which was somewhat larger than the PN-9's, and at the time was the largest flying boat in operation. It was powered by tandem geared Packard 1A-2500 engines. The three airplanes were scheduled to start the flight on August 28, 1925.

In preparation, the Navy flew one of the PN-9's from the Naval Air Factory (NAF) at Philadelphia with 1,300 gallons of gas on board as a distance and duration test, and at the same time an attempt to break the existing seaplane endurance record of 14 hours 53 minutes and 44 seconds set in July of 1924. The plane had two pilots, Lt. C. H. Schildhauer and Lt. J. R. Kyle Jr., Chief Machinists Mate Charles Sutter and Capt. Lionel Woolson, designer of the ship's engines, on board.

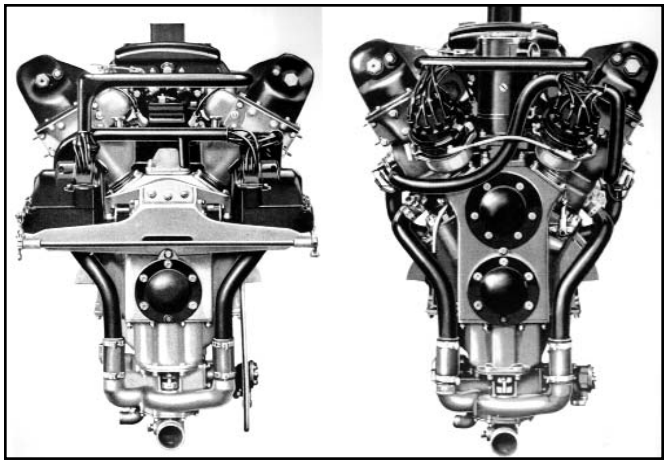

Rear view of magneto equipped engine (left) and one with battery ignition (right).

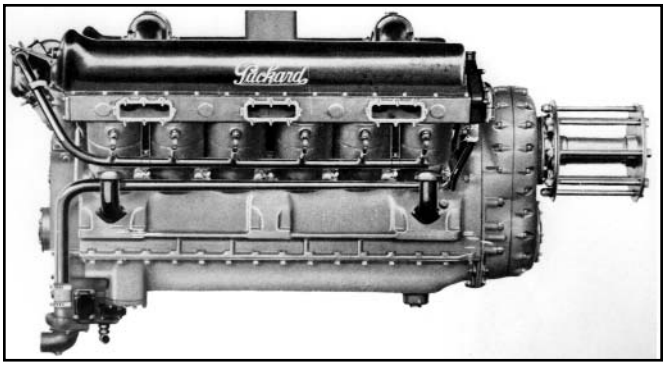

2A-2500 geared engine. Note the different design oil breathers and added strengthening we bat the center of the upper crankcase relative to the 1A-2500.

The plane was flown up and down the Delaware river on a 40 mile course between the Navy Yard and Fort Delaware until it was about to run out of gas, and then circled close to the Navy Yard until all fuel was exhausted at which time the pilot turned the plane into the wind and landed it at 2:58 P.M. on May 2, 1925. The record flight had covered 2,230 miles and lasted 28 hours, 35 minutes and 27 seconds.

Packard was quick to use the new record for advertising purposes and their July 13, 1925, ad in Aviation magazine, headed "Dependability!", pictured a 1A-1500 engine, the PN-9 flying over the Philadelphia Navy Yard and quoted the new and old records, the difference being quite impressive. It was also used in another Aviation ad on August 17, 1925, in conjunction with quoting two other recent Packard-powered records. This ad was titled "Supreme - Air, Land and Water" and included the 8,100 mile record transcontinental flight of the Shenandoah and the 24 hour distance record of 1,064 miles set by Harry Greening's Packard marine 1M-618-powered Rainbow III in 1923.

The plane had run out of fuel some two hours after it could have theoretically reached Maui on their planned August flight, and the prevailing winds in the Pacific area in which they were to fly were suppose to aid them with a tail wind for the trip. Thus they felt safe in their ability to complete their goal. The estimated flight time to Maui from San Francisco was slightly over 26 hours.

The Hawaii flight was to begin on August 31 (it had been delayed slightly since the originally date was set). Shortly before the flight the Boeing PB-1 had broken an oil supply line and thus its participation with the two PN-9's was canceled. PN-9 No. 1 was commanded by Comdr. John Rogers. It took off from San Pablo Bay at 2:41 P.M. followed fourteen minutes later at 2:55 P.M. by PN-9 No. 3 under the command of Lt. Allan P. Snody.

PN-9 No. 3 went down to an unscheduled landing at the 300 mile point after her engines ran out of oil because of broken oil lines, the same fate which had grounded the PB-1. It should be noted here that these engines were all of the "dry sump" type, that is, they carried their oil supply external to the engine and had an external oil cooler as well. Therefore breaking an oil line was a crippling failure since the engine would not operate long without an oil supply.

PN-9 No. 1 continued on its scheduled path while the mine-layer Gannett was dispatched to tow the PN-9 No. 3 back to San Francisco. The flight of the PN-9 No. 1 was uneventful as it passed one after another of the numerous patrol ships stationed along the way. A radio report was received from Comdr. Rodgers as his plane passed over the destroyer Farragut at 1 P.M. on September 1, 1,600 miles from San Francisco and with only about 420 miles to go.

The plane had run into head winds instead of having favorable tail winds and shortly after passing the Farragut it became evident that they could be in trouble. At 1:18 P.M. Rodgers radioed "Plane very low on gasoline and doubt ability to reach destination. Keep a careful lookout." The next message was "Please keep a good watch. Gas is about all gone. I think it impossible to get in." The next message was "Running out of gas. Will probably have to land at Aroostook or Tanager (two of the several patrol ships stationed along their route). Please stand by." This was followed by "Plane low gas. Asking bearings from Aroostook."

No more was heard from PN-9 No. 1 and a sea search was started immediately. The plane had gone down at about 1:30 P.M. on September 1, 1925. The search went on for nine days and hopes were growing dim indeed when at 4:00 P.M. on September 10 the


November 9, 1925 AVIATION 687

Ten Years of Packard Pioneering in Aircraft Motor Development

1915-1925

Endurance !

- a new seaplane record for distance flown over water

Packard Model 1A-1500

Two of these motors formed the power plant of the PN-9 No. 1 on its record making flight to Hawaii. The motors have a bore of 5 3-8 in., a stroke of 5 1-2 in., a displacement of 1500 cu. in., and develop 500 b.h.p. at 2000 r.p.m. Their weight is 720 lb.—but 1.44 lb. per effective hp.

ON the recent flight of the PN-9 No. 1 to Hawaii, Packard aircraft motors again set a new world's record—for distance flown over water. When the PN-9 No. 1 was forced down for lack of fuel, 2116 statute miles had been covered—a distance greater by 1122 statute miles than any other seaplane ever covered in a flight across the ocean. "The engines worked perfectly," reported Commander John Rodgers in commenting on the flight. Additional proof of the endurance and reliability of Packard Motors under all conditions was furnished after the plane arrived at Honolulu. The wings were repaired, and the seaplane flown for four hours with full load.

PACKARD MOTOR CAR COMPANY

Detroit, Michigan

ASK THE MAN WHO OWNS ONE

plane was sighted by submarine R-4, 15 miles from the Hawaiian Island of Kauai. It was taken in tow and the crew was found to be hungry and thirsty but generally in good condition.

They had run out of gas at 800 feet altitude after failing to find the Aroostook and glided in for a good landing. Taking full advantage of their Navy training, the crew rigged a sail made from fabric removed from the airplane's wings. They sailed some 400 miles from their landing point westward, passing north of the island of Oahu, close enough to have it in sight but unable to make land. They sailed another 100 miles before being sighted by the submarine R-4, but would have reached the shores of Kauai on their own in another few hours had they not been sighted.

Other than the missing wing fabric, the airplane was in excellent condition when it reached Kauai. The wings were repaired and the airplane immediately put back in service.

Even though the Hawaii flight was not entirely successful, Packard used the good points of it in their November 9, 1925, Aviation ad which proclaimed "Endurance! - a new seaplane record for distance flown over water." "When the PN- 9 No. 1 was forced down for lack of fuel, 2,116 statute miles had been covered - a distance greater by 1,122 statute miles than any other seaplane ever covered in flight over the ocean." The reader will note that the Philadelphia flight exceeded this one in distance, having covered 2,230 miles (but not entirely over water). "The engines worked perfectly," reported Comdr. John Rodgers.

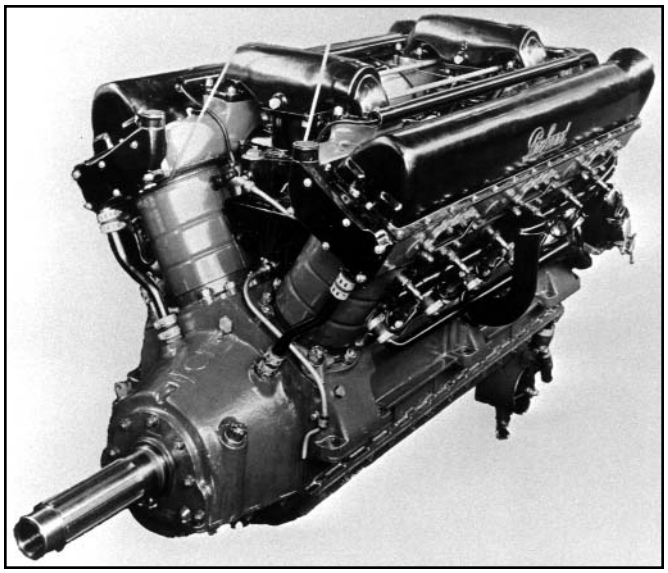

3A-2500 direct drive engine

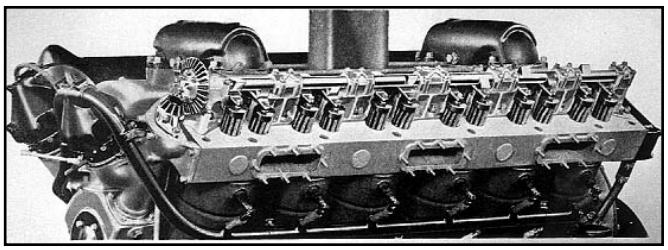

View from a Packard manual showing the 1500 and 2500 overhead camshaft design.

A number of other record-breaking flight attempts of one kind or another were made by the Navy with Packard engines over the next few years, and the reader is referred to *Packards At Speed* for the complete story of them.

The 2A-1500 engine saw Army use in the XB-1 Keystone Cyclops and the Boeing XP-8 pursuit, and Navy use in the PN-10, Loening OL-3 and OL-6, Curtiss R3C-3 race plane and Boeing FB-5.

The 2A-2500 engine was used in the Army XHB-1 Huff-Daland, the LB1 Huff-Daland and the Navy Douglas DT-5.

The 3A-2500 Aero Engine

In 1926 the 2A-2500 engine was upgraded to 3A version. Many changes were made, but the more important ones were as follows. The main bearing design was changed to the long through-bolt type used on the 2A-1500. Pressed in Delhi hard-steel valve seats were incorporated and valve adjustment changed from shim to threaded tappets. The oil pressure relief valve was re-designed and a much larger cylindrical oil screen replaced the former square type. A single large crankcase breather was provided on each side of the crankcase in place of the end-mounted pair on each side of the prior model. Fins were added to the under surface of the crankcase lower half to assist in oil cooling. The principal user of this engine was the Navy. Three single- engine Boeing TB-1 airplanes were powered by it as were 100 Martin single-engine T3M-2 torpedo bombers.

It was built with two types of carburetion systems. The first followed the same design as prior models—between the cylinder banks mounted dual Stromberg model NA-S12 carburetors. The second system used two Stromberg NA-58J carburetors mounted on the outside of each bank. This required redesigning the valve system to provide intake and exhaust ports both on the outside, rather than the former intake between cylinder banks and exhaust on the outside of the banks. These two systems are referred to as "inside" and "outside" carbureted, the "outside" design being used on three other engines discussed later.

The only "outside" carbureted 3A-2500 engines thus far found are geared and Air Service (Army) marked.

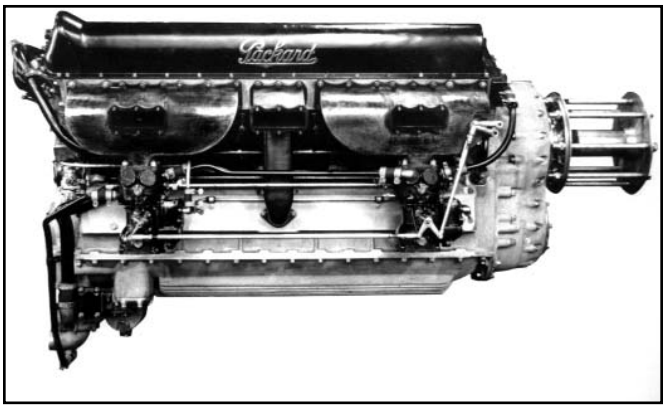

3A-2500 "outside carbureted" engine.

Three are currently known (512, 545 and 561). Examination of the latest known parts manuals indicated there were probably only five engines built in this configuration, serial numbers 506, 512, 545, 561 and 571. Number 571 was used as the basis for the only 4A-2500 engine built, and will be discussed shortly.

The 3A-1500 Aero Engine

In 1927 the 2A-1500 was likewise upgraded to 3A-1500. The hardened steel valve seats and adjustable tappets of the 3A-2500 type were also incorporated in this model, as was the redesigned oil pressure relief valve and several other relatively minor interior changes. The outward appearance of the engine did not change with the exception of the inverted model. In this case the carburetor manifold was changed in order to bring the carburetors and intake up between the cylinder banks. In order to be able to do this and still have access to both plugs on each cylinder, one normally being on the outside of the cylinder and one on the inside, the cylinder was redesigned and both plugs mounted on the outside of the cylinder.

Shortly after introduction of the 3A-1500, Packard released information on a novel oil cooler they had designed for the inverted version of the 1500 engine. As has been noted earlier, breaking of external oil lines feeding cooling radiators had been a continuing aircraft problem. Packard's new cooler would not only eliminate such problems by eliminating external cooling oil lines but would reduce overall weight of the combination of engine and required oil cooling devices.

The invention consisted of an oil cooler which was a false top for the crankcase above which was an 8 1/2-gallon cast-aluminum oil reservoir. Both the internal and external surfaces of this reservoir carried cooling fins. Inside the reservoir was a group of steel tubes longitudinally extended through it with holes drilled at intervals in their tops. Oil was pumped through these tubes by the same pump which was normally used to force oil through an external oil radiator. This oil was thus sprayed through the holes onto the bottom surface of the reservoir top where the finned inner surface picked up the heat of the oil and transferred it to the fins of the outer surface, which in turn transferred it to the outer air as this extended top surface of the engine was now utilized as the top surface of the engine cowl and was directly exposed to the outside air. The oil overflow from this reservoir drained into the timing gear case which was capable of holding another 2 gallons of oil. Thus the system became an 11 gallon oil reservoir to replace the external one generally provided by the external cooling system.

Beginning in June of 1928 the Aeronautical Branch of the Department of Commerce began issuing "Approved Type Certificates" (A.T.C.) for aircraft engines after subjecting them to testing. A.T.C. 18 was issued to the 3A-1500 engine on January 26, 1929, with a rating of 525 hp @ 2,100 rpm and A.T.C. 19 to the 3A-2500 on the same day rating it at 800 hp @ 2,000 rpm.

The 4A-2500 Aero Engine

The next numerical model of the 2500 series (but not the last engine produced) was the 4A-2500. It was a single-engine produced under Air Corps contract No. 940. The contract was let in late 1926, the object being to produce a high-altitude engine using two General Electric 10,000-foot centrifugal superchargers.

Two new designs had to be used in order to accomplish the object. The first was the design of the 10.08:1 supercharger drive. This drive gear train was coupled to the crankshaft by means of a patented spring steel coupling in order to relieve it of the stress of inherent crankshaft oscillations which commonly caused gear failures in such installations. This engine also employed a reduction gear for the propeller which was driven through the same spring coupling. The patent covering this feature was applied for by Capt. Woolson on February 2, 1927, and patent No. 1,874,681 was issued on August 30, 1932.

The second design was that required to have both the intake and exhaust ports on the outside of the engine in order to allow direct supercharger to intake manifold runs. This feature was then used as well on the "outside" carbureted 3A-2500 engines also produced for the Air Corps and both the 1M-2500 and 2M-2500 marine engines. In conjunction with this new valve housing design, the water connections to the housing were moved from passages from the cylinder head to external pipe connections, thus eliminating the need to

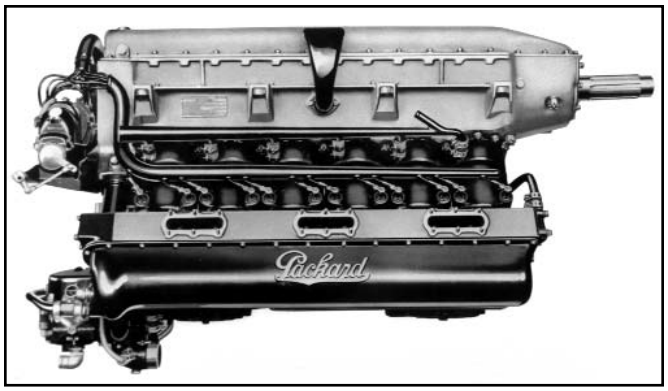

3A-1500 inverted. Note the carburetors are completely hidden between the cylinder banks. Also note the placement of both spark plugs on the outside of the cylinders for accessibility.

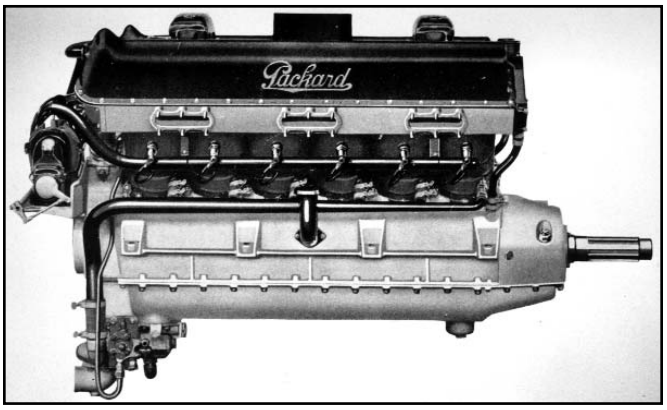

3A-1500 direct drive engine.

use gaskets at the connection between the valve housing and the cylinders, that connection now being a machined-and-lapped fit.

3A-2500 serial numbers 506, 512, 545 and 561 were produced at about the same time as was this 4A-2500, and the 4A-2500 contract was undoubtedly what instigated the design. The first 1M-2500 engines were built about a year later.

The resulting engine weighed 1,640 pounds and successfully passed Army acceptance tests on March 21, 1928. The engine was rated at 900 hp @ 2,300 rpm and produced 950 hp @ 2,180 rpm with the boost of 6.5" inHg. The Packard No. of the engine was 571 and the Army was No. 28-288.

The 5A-2500 Aero Engine

Some Packard engineering documents have been found dated February 28, 1939, and March 14, 1939, indicating that (probably not long before that time) they also built a direct and a geared 5A-2500. No photographs of it have been found but most physical dimensions, bearing sizes, etc., are quoted and power output is listed as 1,750 hp @ 2,800 rpm and 1,500 hp @ 2,500 rpm with a BMEP of 190. Weight was 1,430 lb geared and 1,225 lb direct. Power output approximated that derived from the Gar Wood 1M-2500's in 1935 and would indicate the engine was supercharged, as would also the BMEP of 190.

The 1A-2775 Aero Engine

In 1926 a number of civilians and military officers conceived the idea of building an airplane with which to break the air speed record with an American plane. It was hoped that the U.S. Navy would finance the project, and Navy officials committed that they would when funds became available. In the mean time the project was started and the necessary funds provided by about 20 New York business men and Packard.

The airplane was built by the Kirkham Products Company of Garden City, Long Island, New York, and the engine designed by Capt. Woolson and built by Packard. The engine was of an "X" configuration utilizing one upright and one inverted 1500 engine mounted on the same crankshaft and destroked 1/2". This 5 3/8" bore and 5" stroke resulted in a displacement of 2,775 cubic inches. (Rods were of a master/slave design resulting in slightly longer than 5" stroke in three of four banks, and thus slightly more displacement than the 2,722.88 cubic inches produced by an engine of 24 cylinders, 5 3/8" bore and exactly 5" stroke.) Power output was 1,250 hp @ 2,700 rpm and weight 1,402 lb for a power-to-weight ratio of 1.122 lb/hp.

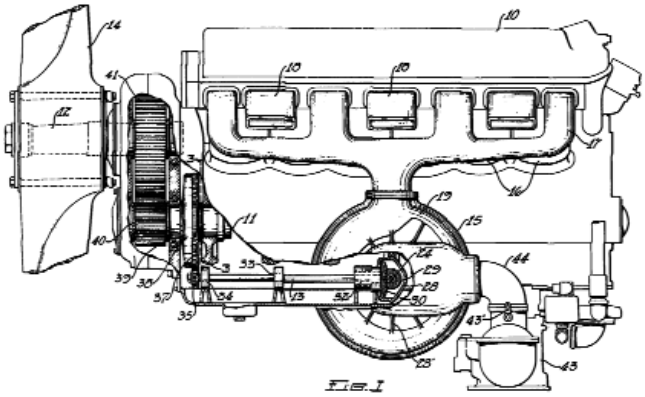

Patent number 1,874,681, filed on February 2, 1927 and issued to L. M. Woolson on August 30, 1932,for features of the 4A-2500 engine.

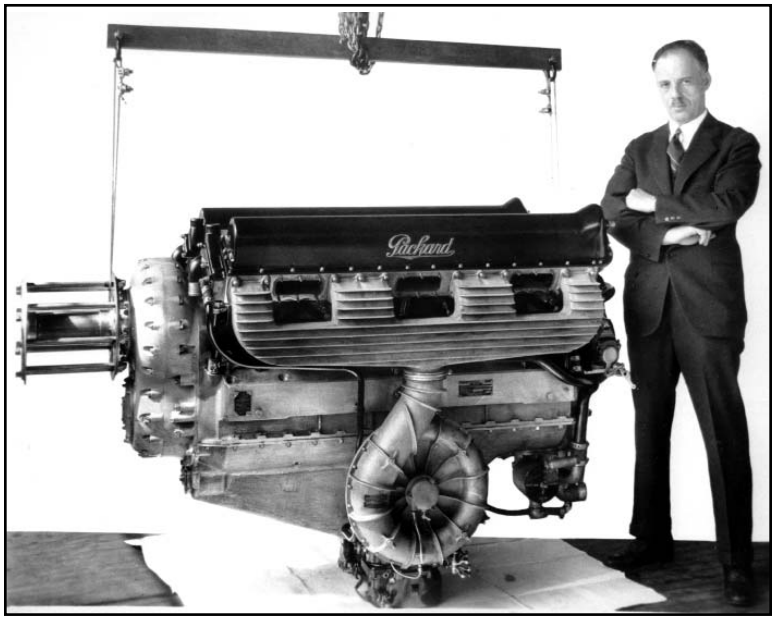

Capt. Woolson stands beside the recently completed 4A-2500 high-altitude engine. The left of its pair of General Electric Superchargers may be seen.

1930'S Customers For Allison Bearings

Pratt & Whitney Aircraft Co.	Fiat
Curtiss Aero and Motors Co., Inc.	Schwitzer-Cummins Co.
Packard Motor Car Co.	Lycoming Mfg. Co.
Wright Aeronautical Corp.	Continental Motors Corp.
Duesenberg Bros.	Hamilton Standard Corp
Westinghouse Elect. Co.	Hispano-Suiza Co.
National Air Transport	Bendix Products Co.
Mitsubishi Co. Ltd.	

From 1925 Packard used Allison "steel-backed" bearings in all marine and aero engines as did many other engine manufacturers, as can be seen by this statement made by Allison in later promotional literature (courtesy of Rolls-Royce/Allison).

Although the design theory sounds simple, the mechanics involved in executing it were not. The most difficult problems were the design of the crankshaft, single piece crankcase and the master/slave rod system. The crank cheeks also performed as main bearing journals and were 7 3/4" in diameter. This was done in order to be able to keep the crankshaft length to the same as used in the 1500 engine, allowing use of the 1500 components and keeping weight down by not having to lengthen the engine. The single piece crankcase was designed to save weight and give maximum strength, but made assembly of the engine difficult.

The airplane and engine were finished by August of 1927. It was decided that the plane would be entered in the 1927 Schneider Trophy Race to be held in Italy. As will be seen later, the plane was not raced. However, when that decision was made, the Navy ordered a second engine built under their original contract (No. 3224). The second engine was supercharged and the story behind it is best told by Capt. Woolson in his test report of it dated June 13, 1928.

"The second Ex engine built for the Bureau of Aeronautics under Contract No. 3224 was equipped with a special Roots-type supercharger as shown in the photograph on page 7.

This unit was designed, built and tested in the short space of ten weeks when it appeared likely that the special Kirkham racing plane built for Lt. A. J. Williams in 1927 would participate in the Schneider Trophy Race held last year in Italy. Confidential information from abroad indicated it would be necessary to supercharge the Ex engine in order to equal the reported speeds of the other contestants. Under the strenuous conditions obtaining in making these last minute preparations for participation in the race it was impossible to devote the time necessary to calibrate the engine equipped with the supercharger. All the available time was devoted to arriving at suitable carburetor settings to secure satisfactory performance on the dynamometer and the supercharger impellers were given liberal clearances to avoid any possibility of rubbing and possibility causing trouble during the race.

It later transpired that largely due to unsatisfactory pontoon design the plane was unable to participate in the race, and as a consequence the supercharged engine was never installed in the plane, all flight testing having been accomplished with the unsupercharged engine.

The Bureau of Aeronautics made a thorough analysis of the possibilities of the plane and decided that the extra weight of the supercharger could be used to better advantage in a reduction gear which would result in a gain in propeller efficiency giving a greater all around improvement in performance than would be yielded by the increased power of the supercharged engine using a direct drive propeller.

It was furthermore planned to increase the compression ratio of the unsupercharged engine and thus improve its performance with no increase in weight. However, as a matter of record and for possible consideration at a later date, it was desired to secure dynamometer data on the supercharged engine.

The test produced a maximum power output of 1,300 hp @ 2,800 rpm. Because of the large impeller clearance mentioned above, maximum manifold boost available was only 7.7 inHg. With reduced clearances the supercharger would produce 9.6 inHg of boost and the engine would produce 1,500 hp @ 2,700 rpm.

Engine No. 1 was later modified by installing a reduction gear built by Allison, increasing its compression ratio, installing Scintilla magneto ignition, and using the new design cylinder banks of the 3A-1500 inverted engines with both spark plugs on the outside. (Engine No. 1 had been tested with both Delco battery and Scintilla magneto ignition.) Official Packard photographs of this engine are noted on the back as model 2A-2775, and the file of photographs of the two prior versions are marked "not to be released to the press—hereafter only 2A-2775 are to be released—per Capt. Woolson."

Most of the later (1929 and thereafter) published photographs are of this engine. However, in spite of Woolson's note, it is called either a 1A-2775 or the "Packard X engine." Packard listed the engine as available built-to-order as late as September of 1930 at $35,000. No orders surfaced and only two engines were built, both for the Navy—thus the model designation of 2A-2775 never came into public use.

Later, engine No. 2 was also equipped with the new style cylinder banks and was tested with and without reduction gear. The direct drive and reduction gear units were interchangeable and were switched back and forth between the two engines for testing.

Engine No. 1 in its most modified version, with high compression, reduction gear and late type cylinder banks, was used in the Mercury racing plane which

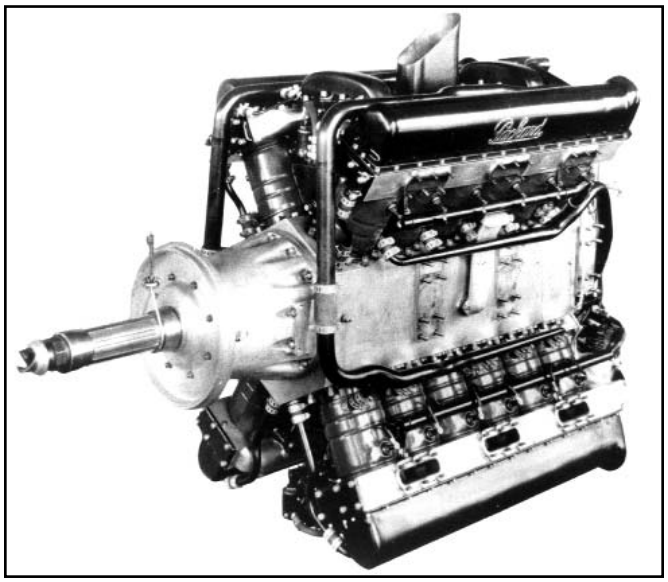

1A-2775, Serial No. 1, Bureau No. 10960, shown in its early configuration with direct drive.

Al Williams poses by the 1A-2775 powered Kirkham-Packard race plane after its conversion from a seaplane to a land plane.

was built as a U. S. entry in the 1929 Schneider Trophy. Once again float design was a problem and the plane was not ready at race time and did not participate.

Engine No. 1 is the only known 1A-2775 survivor and it was given by the Navy to the Smithsonian in 1971 and is currently in storage at their Silver Hills facility. It is in the same configuration as it was when used in the Mercury racer.

A number of the features of the 1A-2775 engine were patented, all by Captain Woolson with applications filed between July and October of 1928.

The 2A-2775 Aero Engine

Packard apparently built a third engine some time after 1931 when the Navy had stopped testing its engines. No photographs of this engine have been found but engineering data dated in early 1939, which was prepared while making comparisons of specifications of Packard and other manufacturers aircraft engines, show a 2A-2775 with an output of 1,900 hp @ 2,800 rpm. BMEP was listed as 196 and would indicate the engine was supercharged.

The 1A-3000 Aero Engine

The 1939 group of engineering material also listed the statistics of several other "X" and "H" Packard engines of large size. During the 1938-39 era the military had become interested in developing very large aero engines and this was probably the catalyst behind Packard's last large engines. The 1939 documents indicate a 3,000 and three versions of a 5,000 cubic inch engine may have been built. The 3,000 and one 5,000 were "H" configurations and the other two 5,000 engines were "X" types, one 90º and one 60º.

The 3,000 had a bore and stroke of 5 3/8" x 5 1/2" for a displacement of 3,060 cubic inches. Rated power was 2,000 hp @ 2,800 rpm and take off power was 2,350 hp @ 3,000 rpm. BMEP at those ratings were 185 and 203. This would have been their 1A-3000 model.

The 1A, 2A and 3A-5000 Aero Engines

The three versions of the 5,000 engine were as follows: Two poppet valve types—A 60º "X" design with bore and stroke of 6 3/8" x 6 1/2", which, from all the various dimensions given, was designed very much like the 1A-2775 except it was based on the 2500 aero engine pistons, rods, valve system (with the exception that it no doubt used sodium-cooled rather than oil-cooled valves) and cylinders. Main bearing diameter was 10". Displacement was 5,080 cubic inches, weight (direct drive) was 2,830 lb, rated power was 3,000 hp @ 2,500 rpm and take off power was 3,500 hp @ 2,700 rpm. BMEP values at these ratings were 190 and 202 respectively. This would have been their 1A-5000 model. The next engine was an "H" configuration based on the same cylinders and having the same bore, stroke, valve system, displacement and power ratings. It weighed a little less at 2,750 lb in direct drive. This would be their 2A-5000 model.

A sleeve valve version with a 90º "X" design was also proposed with the same bore and stroke. This engine differed in most other respects however. Cylinder banks were cast en bloc because of the sleeve valve design. Documents give all dimensions of the engine that were listed for the others, including exterior physical dimensions, bearing sizes, cylinder spacing, ratings etc., but no finished weight as they did with the other engines. Therefore there may be more doubt as to whether this version was actually built—not that there are any absolutes that the others were. Considering the engineering and construction expense involved, there is minimal chance any 3000 or 5000 series engines were actually built and tested. BMEP and power ratings were the same as the other two 5000 engines. This would be their 3A-5000 model.

Table 1 depicts the known statistics of American water-cooled "Hyper" engines of the period 1938 to 1944. Some of them were built as prototype engines and some never got past the drawing board. They were conceived at a time when the military was becoming highly interested in engines producing far more power than was available for future "super" planes. Development costs of such engines would be

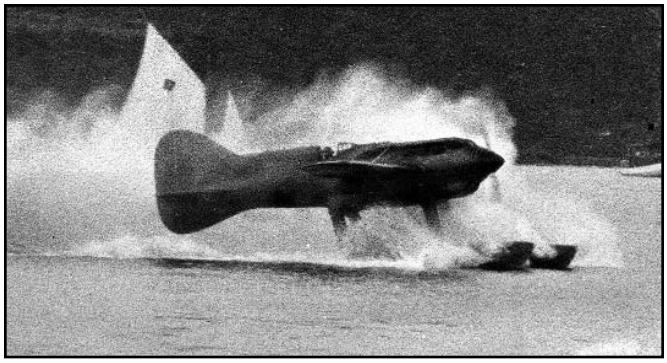

The 1A-2775 Mercury-Packard race plane during tests during August of 1929. Poor float design resulted in excess spray bending the propeller. The problem was not resolved in time to allow the plane to compete.

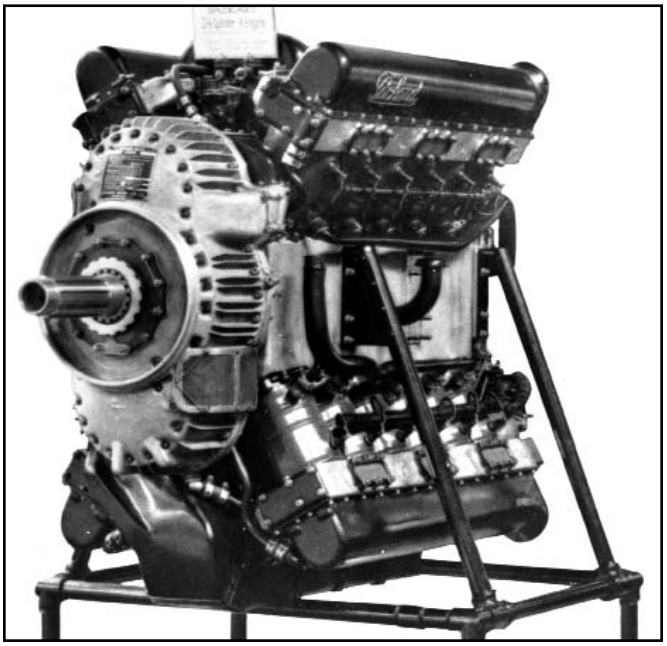

1A-2775, Serial No. 2, Bureau No. 12405, in supercharged configuration.

very high and necessarily have had to be born by the government. Some did receive early funding which was later withdrawn after it became apparent that there would not have been time enough (4 to 5 years) to get them into the production stage before the projected end of the war. The larger air-cooled radials were chosen instead because they were already well into their development cycle.

Packard made the statement when the new 1500 and 2500 engines were first introduced that they had produced about 100 aero engines of their new post war designs up to that time. As can be seen from the itemized list of them in the 1919 - 1923 article, Packard built about 106 engines of postwar designs up to the introduction of the 1500/2500 series. Adding to that about 80 1A-1650 engines gives a total of 186 aero engines. A reasonably accurate estimate of production (no records available) of the 1500/2500/2775 series of engines is:

1500/2500/2775 AERO ENGINE PRODUCTION

Model	Production
1A-1500	29
2A-1500	200
3A-1500	19
1A-2500	6
2A-2500	75
3A-2500	175
4A-2500	1
1A-2775	2
Total	507

(1919-1924 production was 186 engines. Adding the 507 above gives a total pre-WWII production of 693.)

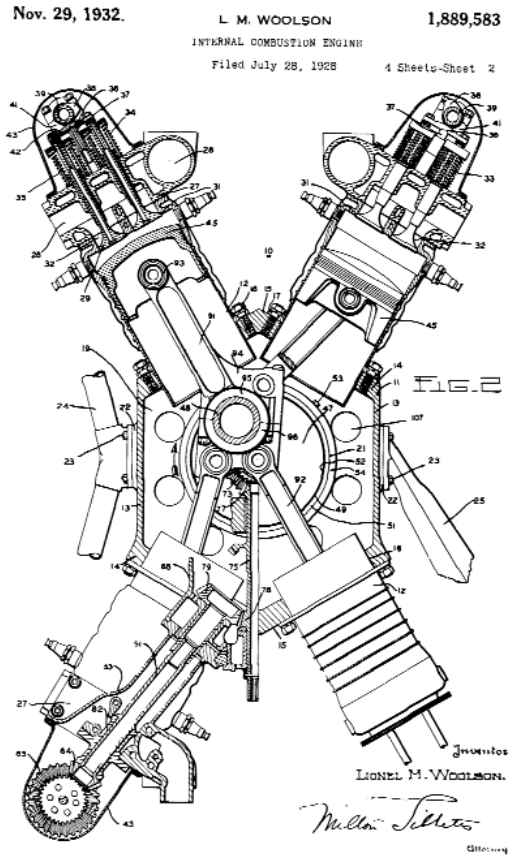

Patent number 1,889,583 issued to L. M. Woolson for the basic design of the 1A-2775 "X" engine.

Table 1. Large American Liquid-Cooled Aero Engine Designs of 1938-44 (The "Hyper" Engines)
(Some were actually built, and some were only designed. Listed in order by displacement.)

Date	Manufacturer	Model	Configuration	Rated Power hp @ rpm	Max Power hp @ rpm	Bore x Stroke inches	Displacement in^3	Weight lb	lb/hp
1941	Menasco	IV-2040	IV-12	1500 @ 2700	2000 @ 3000	6.000 x 6.000	2040	2100	1.05
1939*	Wright	R-2160	R-42	2000 @ 3800	2350 @ 4150	4.250 x 3.750	2160	2735	1.16
1941*	Chrysler	IV-2220	IV-16	1700 @ 3200	2000 @ 3200	5.800 x 5.250	2220	2150	1.08
1944*	Chrysler	IV-2220-9	IV-16	2150 @ 3200	2500 @ 3400	5.800 x 5.250	2220	2180	0.87
1939*	Lycoming	H-2470	H-24	2000 @ 3100	2300 @ 3300	5.250 x 4.750	2470	2400	1.04
1939*	Packard	5A-2500	V-12	1500 @ 2500	1750 @ 2800	6.375 x 6.500	2540	1430	0.82
1938*	P&W	X-1800	H-24(S)	1800 @ 3000	2200 @ 3200	5.250 x 5.000	2600	2400	1.09
1939*	Packard	2A-2775	X-24	NA	1900 @ 2800	5.375 x 5.000	2775	1640	0.86
1939	Packard	1A-3000	H-24	2000 @ 2800	2350 @ 3000	5.375 x 5.500	3060	NA	NA
1938*	P&W	H-3130	H-24	2000 @ 2800	2300 @ 3000	5.625 x 5.250	3131	3000	NA
1939*	Allison	V-3420	DV-24	2000 @ 2600	2600 @ 3000	5.500 x 6.000	3420	2300	0.88
1943*	Allison	V-3420-21	DV-24	2100 @ 2600	2600 @ 3000	5.500 x 6.000	3420	2655	1.02
1938*	P&W	H-3730	H-24(S)	2250 @ 2700	2650 @ 3000	6.000 x 5.500	3730	3250	1.23
1939*	P&W	H-3730-2	H-24(S)	NA	3000 @ 3000	6.000 x 5.500	3730	3525	1.18
1941	Menasco	H-4070	H-24	2800 @ 2750	3400 @ 3000	6.000 x 6.000	4070	3400	1.00
1941*	Wright	R-4090	R-22	2400 @ 2600	3000 @ 2800	6.125 x 6.312	4290	3230	1.08
NA	Wright	H-4240	H-24	2000 @ 2400	NA	6.125 x 6.000	4240	NA	NA
1939	Packard	1A-5000	X-24	3000 @ 2500	3500 @ 2700	6.375 x 6.500	5080	2830	0.81
1939	Packard	2A-5000	H-24	3000 @ 2500	3500 @ 2700	6.375 x 6.500	5080	2750	0.79
1939	Packard	3A-5000	X-24(S)	3000 @ 2500	3500 @ 2700	6.375 x 6.500	5080	NA	NA
1941*	Lycoming	R-7755	R-36	4000 @ 2300	5000 @ 2600	6.375 x 6.750	7755	6050	1.21
1943	Studebaker	H-9350	H-24	4000 @ 2000	5000 @ 2200	8.000 x 7.750	9349	6870	1.37

NOTES:
(S) Under Configuration = Sleeve valve design. All others are poppet valve types.
The 3A-5000 Packard is a 90° "X" type. All other "X" types listed are 60°
DV = double V
IV = inverted V.
* = known to have been built. Any not so marked may have been actually built but currently there is no evidence to prove or disprove. It appears very unlikely that the Menasco, Wright H-4240 or Packard 3000 or 5000 engines were built.
NA = Information not available.

The Packard statement was "sold" rather than manufactured. Contracts had no doubt already been signed by then for all government engines that were eventually delivered. Thus this statement seems to substantiate estimates of production arrived at by the author after a long and careful study of the subject.

As has been noted, Allison built all the reduction gears used on these engines. Not many records survive for this period of Allison production, but what there are were thoroughly studied by Dan Whitney during his research for his book *Vee's For Victory*. They indicate that about 200 reduction gear sets were built for Packard 1500 and 2500 engines by Allison. Thus we can estimate that production was 40% reduction geared engines and 60% direct drive engines.

TM

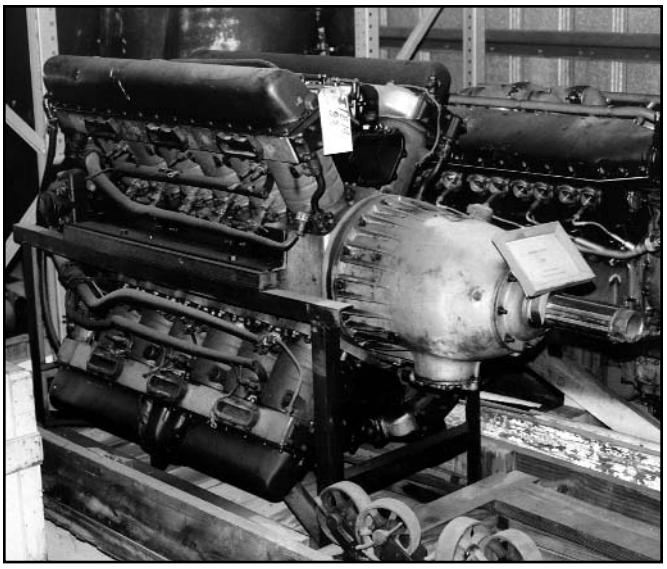

1A-2775 Serial No. 1 as modified for use in the Mercury-Packard race plane with epicyclic reduction gear and new design cylinders with double outside spark plugs. This engine survives in the Smithsonian National Air and Space Museum collection.

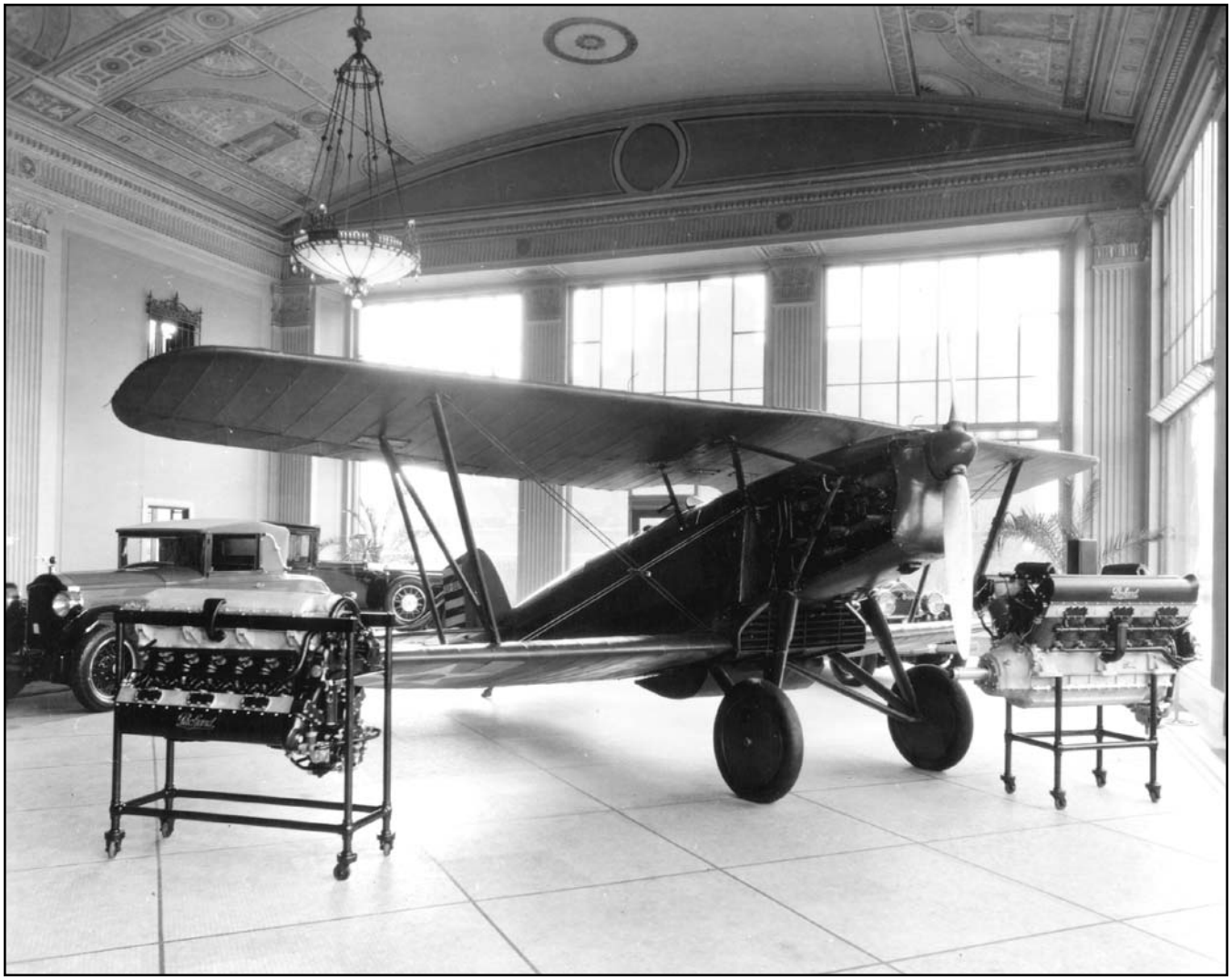

1928 showroom display at the Packard Detroit Branch. The engine at left is an inverted 3A-1500. The engine on the right is a 3A-2500. The airplane is the Boeing XP-8 P-507.